50EE, 50HS, 50HX, 50NE, 50NQ, 50QQ, 50SS, 50SX, 50YX Accessory Outdoor Thermostat

Installation Instructions

50HS-900---006
50LQ-900---001

NOTE: Read all instructions before beginning this installation.

SAFETY CONSIDERATIONS

Installation and servicing of air-conditioning equipment can be hazardous due to system pressures and electrical components. Only trained and qualified service personnel should install, repair, or service air-conditioning equipment.

When working on air-conditioning equipment, observe precautions in the literature, tags, and labels attached to the unit, and other safety precautions that may apply.

⚠ WARNING

Before performing service or maintenance operations on unit, turn off main power switch to unit. Electrical shock can cause personal injury or death. TAG DISCONNECT SWITCH WITH A SUITABLE WARNING LABEL.

INTRODUCTION

Accessory outdoor thermostats provide staged control of multi-stage accessory electric heaters. Each accessory outdoor thermostat energizes a particular stage of heat (in addition to the stages provided by the indoor thermostat) in response to dropping ambient temperature. See Table 1 for accessory outdoor thermostat kit contents.

The accessory supplemental heat relay for 50QQ,YX heat pumps is required only when 2 outdoor thermostats are used with 3-stage heaters. It is automatically energized by the manually operated supplemental heat switch in the indoor thermostat subbase. The thermostat locks out the compressor and the relay bypasses one outdoor thermostat for electric heater operation during heat pump shutdown, when appropriate. When one outdoor thermostat is used, a supplemental heat relay is not required. The supplemental heat switch in the indoor thermostat subbase bypasses outdoor thermostat, locks out the compressor, and activates electric heater.

Mount supplemental heat relay in low-voltage section of control box with sheet metal screw provided.

The 50HS, 50HX, 50SS, and 50SX units have single-stage electric heaters. Only one accessory outdoor thermostat and no supplemental heat relays are required.

Table 1 — Accessory Outdoor Thermostat Kit Contents

ITEM	ITEM PART NO.	QTY
Outdoor Thermostat	HH22QA040	1
Thermostat Setting Label	50MQ501072	1
2 in. Flex. Grommet Strip	50LQ500282	1
Phillips Head Screws (no. 8 screw, 3⁄8 in.)	AL56AU165	2
Wire Ties	HY76TB130	2
Red Wire	48 in., 16 gage	1
Blue Wire	48 in., 16 gage	1

INSTALLATION

1. Mount Thermostat:

   Models 50EE, 50QQ, and 50YX:

   Mount outdoor thermostat(s) on unit center post with screws provided (see Fig. 1).

   Models 50NE and 50NQ:

   Mount outdoor thermostat(s) on bottom panel of control box with screws provided (see Fig. 1). Insert adjusting shaft through holes provided in the bottom of the control panel.

   Model 50HS, 50HX, 50SS, and 50SX:

   Mount outdoor thermostat in low-voltage splice box with screws provided. (See Fig. 1). Insert adjusting shaft through holes provided in the bottom of the control panel.

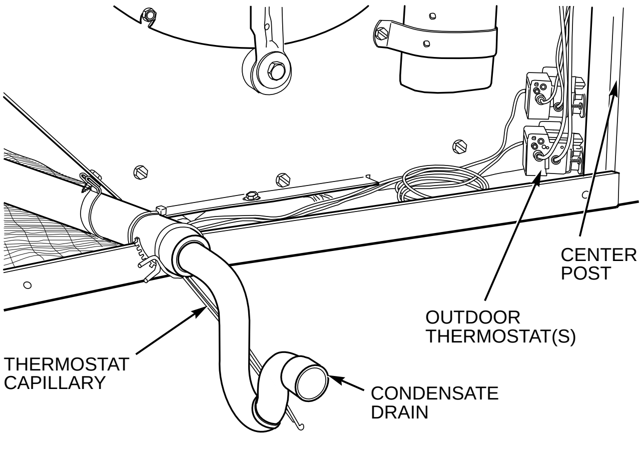

UNITS 50EE, 50QQ, AND 50YX

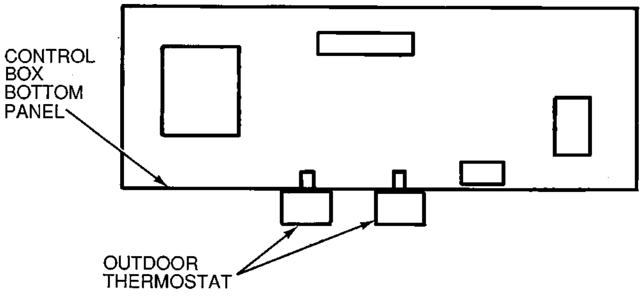

UNITS 50NE AND 50NQ
(TYPICAL 50NE UNIT SHOWN)

Fig. 1 — Mounting Outdoor Thermostat

Manufacturer reserves the right to discontinue, or change at any time, specifications or designs without notice and without incurring obligations.

Book 1 1 4 4 | Tab 1b 5a 5a 6b | PC 111 | Catalog No. 535-047 | Printed in U.S.A. | Form 50HS-4SI | Pg 1 | 6-94 | Replaces: 50N,Q,Y-2SI

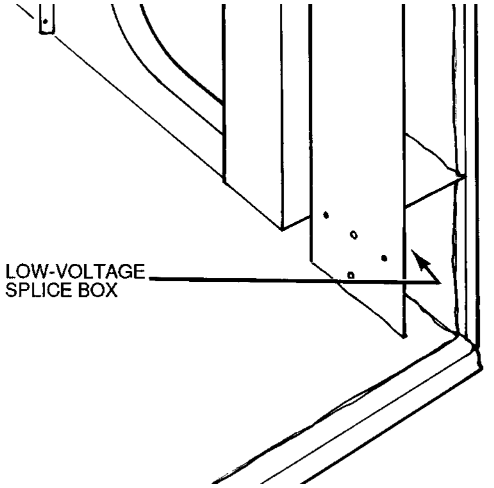

UNITS 50HS, 50HX, 50SS, AND 50SX

Fig. 1 — Mounting Outdoor Thermostat (cont)

2. Attach Thermostat Setting Label:

   Models 50EE, 50HS, 50HX, 50QQ, 50SS, 50SX, and 50YX:

   Attach label to sheet metal over thermostat adjusting shaft (see Fig. 2).

   Models 50NE and 50NQ:

   Attach label to bottom panel of control box (see Fig. 2).

   NOTE: When attaching label, make sure that 40 F/4 C markings coincide with the adjusting shaft position when it is rotated fully counterclockwise.

3. *Models 50EE, 50NE, 50NQ, 50QQ, and 50YX:*

   Uncoil thermostat capillary tube carefully. Route along base of unit and out along condensate drain tube. Protect capillary from sharp edge of basepan with flexible grommet strip provided. Attach capillary to condensate drain with wire ties provided in kit (see Fig. 3). Capillary should extend 6 in. outside of unit.

   Models 50HS, 50HX, 50SS, and 50SX:

   Uncoil thermostat capillary tube carefully. Route through low-voltage wire boot. Wire tie the thermostat capillary to the supply or low-voltage wires (see Fig. 2). Capillary should extend 6 in. outside unit.

4. Route Wires:

   Models 50EE, 50QQ, and 50YX:

   Route wires through hole in center post, along lower side of control panel, and through the hole provided in it. Next, route wires into field low-voltage compartment. Wire to terminals as shown in Fig. 4 and 5.

   Models 50NE and 50NQ:

   Route wires under control box and through holes provided in the bottom of the panel. Wire to terminals as shown in Fig. 4 and 5.

   Models 50HS, 50HX, 50SS, and 50SX:

   Route wires to wire nuts in low-voltage splice box and wire as shown in Fig. 4 and 6. The wires should be trimmed to desired length (around 10 in.).

5. Set thermostat(s) to desired temperature for all units. Consult job specifications for designated temperature setting.

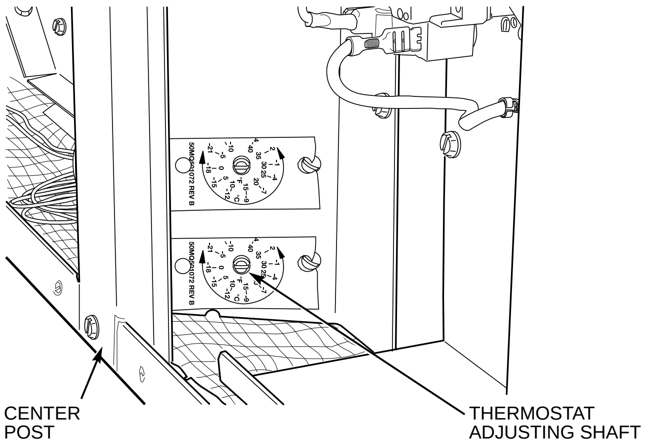

UNITS 50EE, 50QQ,AND 50YX

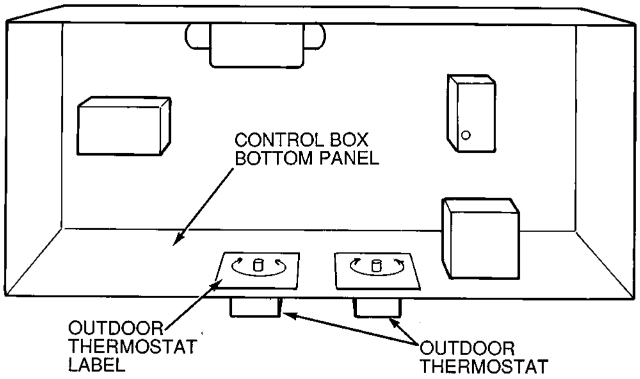

UNITS 50NE AND 50NQ

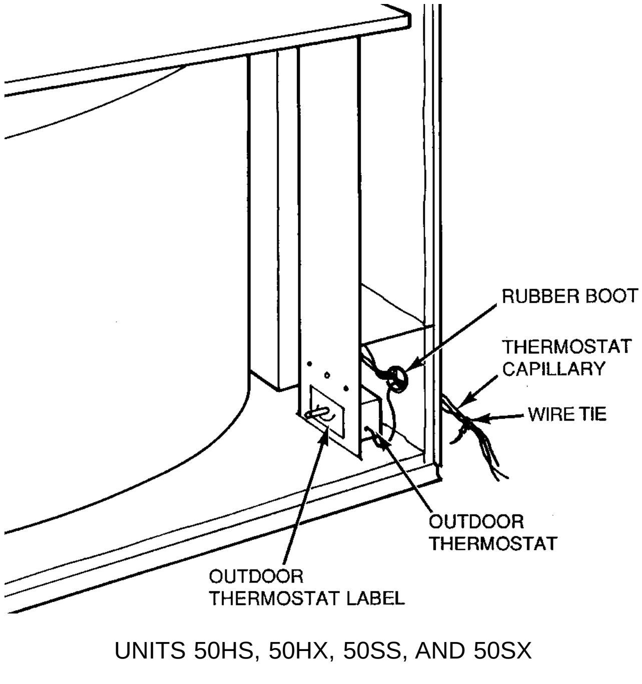

UNITS 50HS, 50HX, 50SS, AND 50SX

Fig. 2 — Attaching Thermostat Setting Label

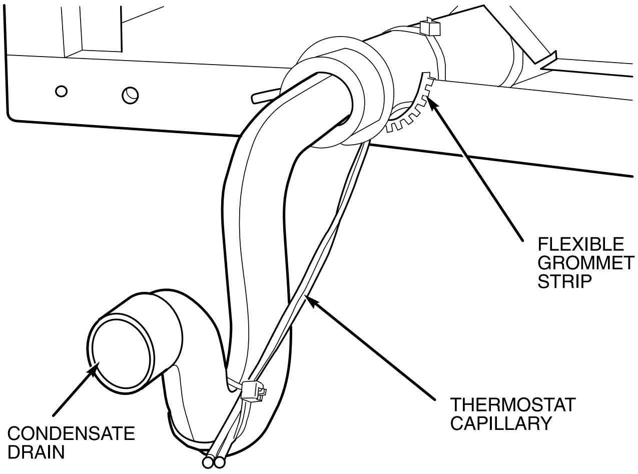

Fig. 3 — Attaching Capillary to Condensate Drain

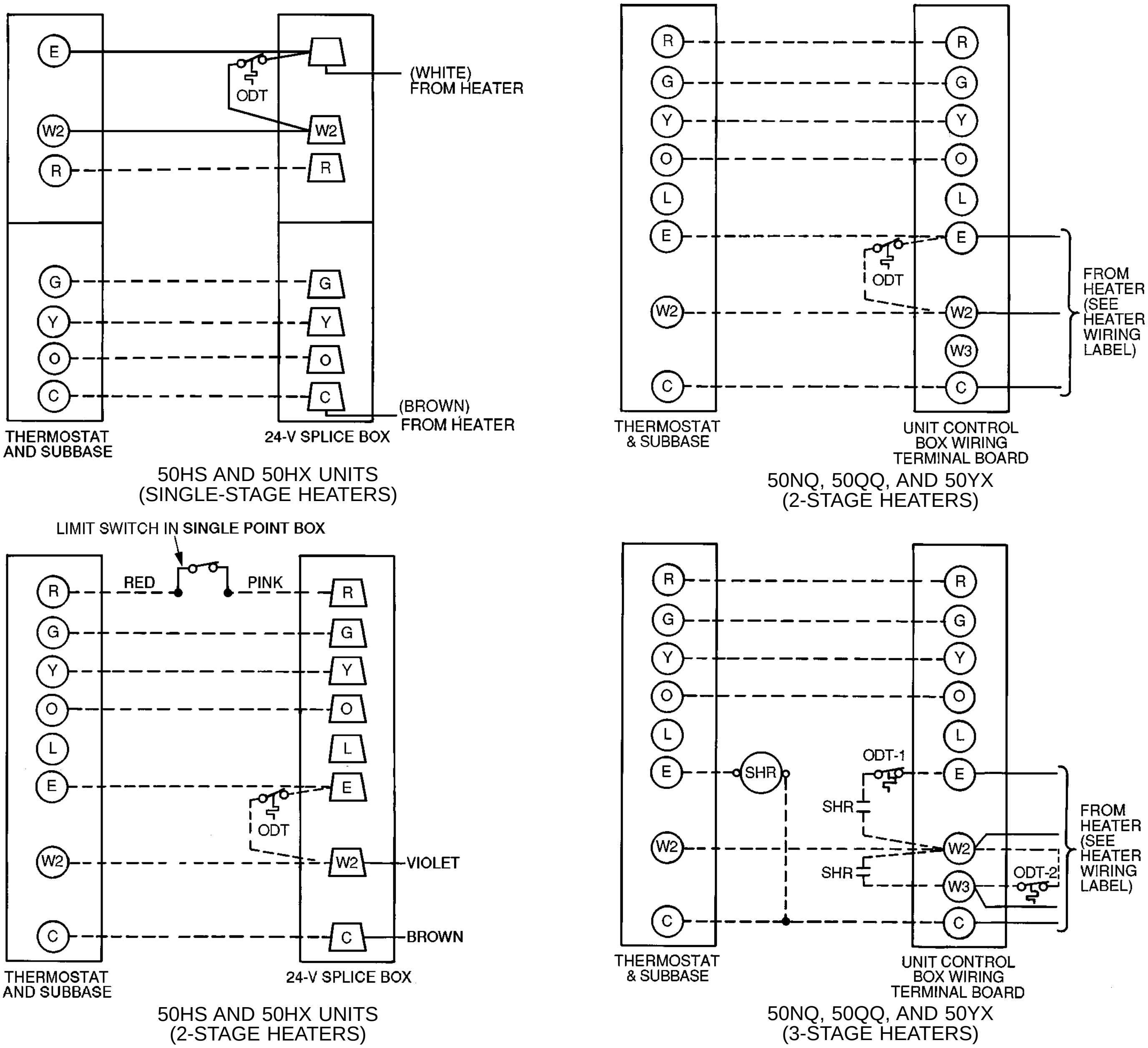

LEGEND

ODT — Outdoor Thermostat
—— Factory Wiring
- - - Field Wiring
—●— Junction

Fig. 4 — Heat Pump Wiring

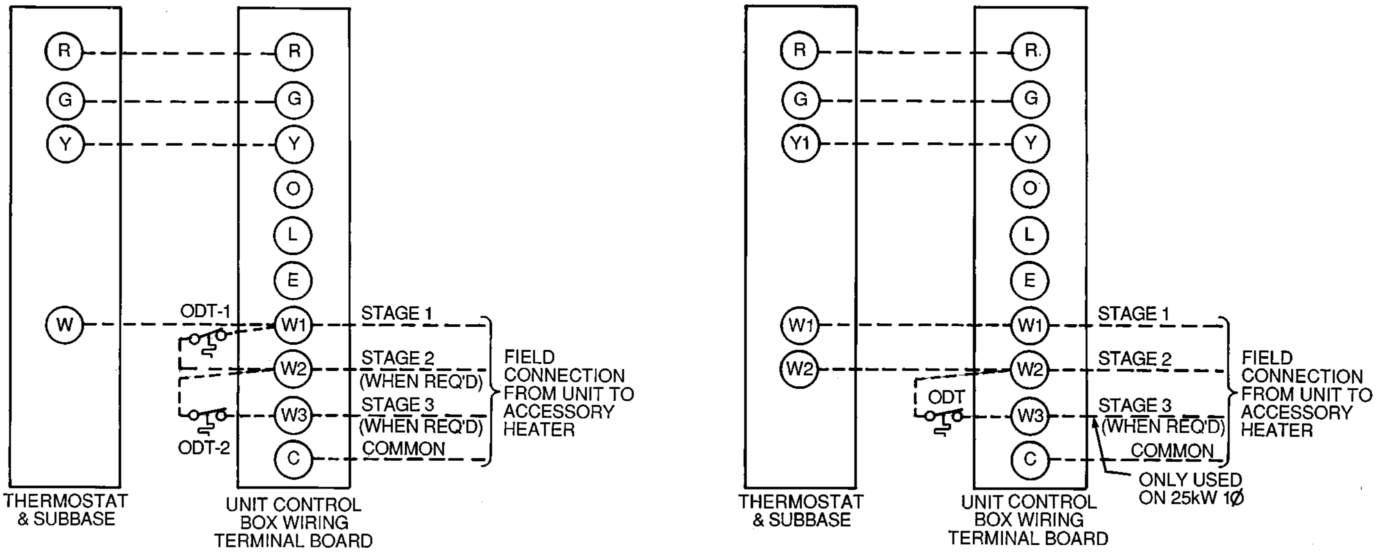

Cooling units with single-stage indoor thermostat and multi-stage heating for 3-stage heaters.

Cooling units with 2-stage indoor thermostat and 3 stages of heating for 3-stage heaters.

LEGEND

ODT — Outdoor Thermostat
——— Factory Wiring
- - - - Field Wiring

Fig. 5 — 50EE and 50NE Cooling Unit Wiring

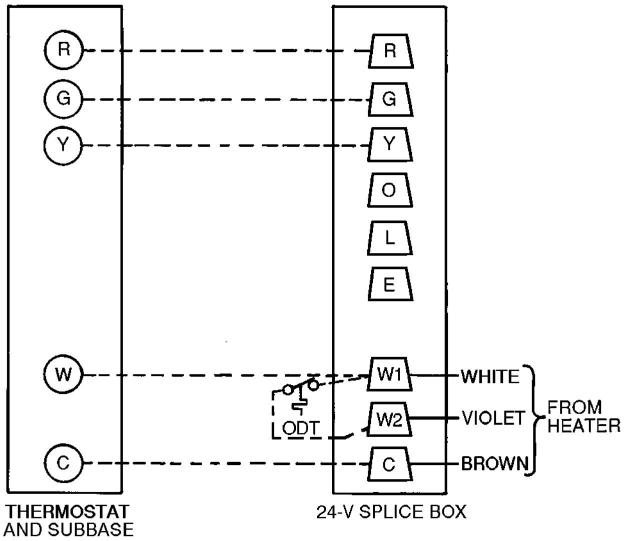

(2-STAGE HEATERS)

Fig. 6 — 50SS and 50SX Cooling Unit Wiring

Copyright 1994 Carrier Corporation

Manufacturer reserves the right to discontinue, or change at any time, specifications or designs without notice and without incurring obligations.